TB-01.9A Box tripod turnstile



+50
+1
temperature range

12V
operating voltage

W
72 W
power consumption

2
passage directions

30
persons/min

automatic anti-panic function

EMM/HID
card format

MIFARE
card format

2
readers

NFC
bank card

NFC-enabled smartphones

Application

TB-01.9A is an electromechanical box tripod turnstile with built-in readers and automatic anti-panic barrier arms, which is designed for indoor operation.

The turnstile is outfitted with multi-format readers of the following standards:

1. EMM/HID
2. MIFARE, which can read:
   - either a unique UID identifier or encryption-protected data from the card's internal memory, which requires additional programming of readers and user cards with a master card configured via the IR18 or IR15.9 USB enrollment reader and PERCo-Web software,
   - UID from payment cards that support NFC contactless payments,
   - a unique identifier generated by the PERCo.Access application on NFC-enabled Android smartphones, which requires the installation and launch of the application,
   - a unique identifier (Token) linked to a bank card via NFC-enabled Apple smartphones (if several bank cards are linked, the Token of the currently active card is read).



Automatic anti-panic barrier arms



RC panel

The delivery set includes an RC panel. The orientation of its buttons relative to passage directions is set when connecting the panel to the turnstile.

It is recommended to install one turnstile per 500 people who work in the same shift or assuming that the peak load totals 30 persons/minute. Turnstiles can come complete with railings made in the same design.

TB-01.9A Box tripod turnstile

PERCo

Operation modes

The turnstile ensures access control in two directions; the turnstile operation mode can be set independently for each passage direction. Available operation modes:

- passage denial in both directions
- single passage in one direction and passage denial in the other direction
- single passage in both directions
- free passage in one direction and passage denial in the other direction
- free passage in one direction and single passage in the other direction
- free passage in both directions

When the power is turned off, the turnstile's barrier arm drops under its own weight, ensuring free passage in both directions.

Main features

- the turnstile is outfitted with two multi-format proximity card readers (EMM/HID, MIFARE) with a Wiegand output interface
- operation of the turnstile via its RC panel, WRC, or ACS
- front covers, outfitted with built-in readers, feature pictogram indicators of readers and turnstile operation modes
- safe operating voltage of max. 14 V
- power consumption of max. 72 W (the maximum value of 72 W is reached within 5 seconds after powering up the turnstile or removing the Fire Alarm signal; power consumption does not exceed 30 W during the rest of the operation)

Built-in reader



Indication block with pictograms

- when the emergency passage unblocking device sends a command, or in the event of power loss, the barrier arm moves to the vertical position, automatically opening the passage
- after the supply voltage is restored or the Fire Alarm signal is removed, the barrier arm is set to the working position manually
- automatic reset of the barrier arms to the initial position after each passage
- the turnstile's damper facilitates its smooth and silent operation
- optical sensors for rotation of the barrier arms ensure correct registration of the fact of passage
- electronic board integrated into the turnstile housing
- the housing has a dedicated place for installation of an ACS controller board
- two control modes – pulse and potential
- galvanically isolated outputs
- the Fire Alarm control input enables connection of a device that sends an emergency unlocking command
- relay outputs for connecting additional remote indicators of passage permission / denial
- when installed in one line, the turnstile housings form a passage zone so that there is no need to install supplementary railings
- the turnstile is made in the same design as the TBC-01.9A box tripod turnstile model with a built-in card capture reader

Design

Turnstile housing – stainless steel with plastic inserts.
Barrier arms – stainless steel.

Operating conditions

In terms of resistance to environmental exposure, the turnstile complies with GOST 15150-69, category NF4 (for application in rooms with climate control).

Its operation is allowed at an ambient air temperature from +1°C to +50°C and relative air humidity of up to 80% at +25°C.

The TB-01.9A turnstile is serially produced and has a TR CU Certificate of Conformity (EAC).

TB-01.9A Box tripod turnstile

PERCo

Operation modes

The turnstile ensures access control in two directions; the turnstile operation mode can be set independently for each passage direction. Available operation modes:

- passage denial in both directions
- single passage in one direction and passage denial in the other direction
- single passage in both directions
- free passage in one direction and passage denial in the other direction
- free passage in one direction and single passage in the other direction
- free passage in both directions

When the power is turned off, the turnstile's barrier arm drops under its own weight, ensuring free passage in both directions.

Main features

- the turnstile is outfitted with two multi-format proximity card readers (EMM/HID, MIFARE) with a Wiegand output interface
- operation of the turnstile via its RC panel, WRC, or ACS
- front covers, outfitted with built-in readers, feature pictogram indicators of readers and turnstile operation modes
- safe operating voltage of max. 14 V
- power consumption of max. 72 W (the maximum value of 72 W is reached within 5 seconds after powering up the turnstile or removing the Fire Alarm signal; power consumption does not exceed 30 W during the rest of the operation)

Built-in reader



Indication block with pictograms

- when the emergency passage unblocking device sends a command, or in the event of power loss, the barrier arm moves to the vertical position, automatically opening the passage
- after the supply voltage is restored or the Fire Alarm signal is removed, the barrier arm is set to the working position manually
- automatic reset of the barrier arms to the initial position after each passage
- the turnstile's damper facilitates its smooth and silent operation
- optical sensors for rotation of the barrier arms ensure correct registration of the fact of passage
- electronic board integrated into the turnstile housing
- the housing has a dedicated place for installation of an ACS controller board
- two control modes – pulse and potential
- galvanically isolated outputs
- the Fire Alarm control input enables connection of a device that sends an emergency unlocking command
- relay outputs for connecting additional remote indicators of passage permission / denial
- when installed in one line, the turnstile housings form a passage zone so that there is no need to install supplementary railings
- the turnstile is made in the same design as the TBC-01.9A box tripod turnstile model with a built-in card capture reader

Design

Turnstile housing – stainless steel with plastic inserts.
Barrier arms – stainless steel.

Operating conditions

In terms of resistance to environmental exposure, the turnstile complies with GOST 15150-69, category NF4 (for application in rooms with climate control).

Its operation is allowed at an ambient air temperature from +1°C to +50°C and relative air humidity of up to 80% at +25°C.

The TB-01.9A turnstile is serially produced and has a TR CU Certificate of Conformity (EAC).

Description of contacts of the built-in electronic board by connectors			
Connector	Contact	Electrical circuit	Function
XT5	1, 2, 3	NO, C, NC	Light B relay contacts – connection of a remote indicator for direction B (not included in the standard delivery set)
XT6	1, 2, 3	L+, L-	AntiPanic relay contacts for connecting the electromagnet of the automatic anti-panic device
X1		LED	X1 (LED) connector for connecting the indication module cable
X2		SENS	X2 (SENS) connector for connecting the cable of the optical rotation sensor unit
X3		MOTOR	X3 (MOTOR) connector for connecting the control mechanism cable with an electromechanical locking device

The integrated CLB electronic board is installed on the bracket inside the turnstile housing. Contacts for the external power supply unit, contacts for connection to built-in readers, and card capture reader control lines are brought out to the same bracket.

Description of contacts of the X1.2 terminal block for connecting readers		
Contact	Electrical circuit	Function
3, 4	R0:D0, R0:D1	Wiegand interface lines of reader 1
5, 6	R0:Led Red R0:Led Green	Indication control of reader 1*
7	R0:Beeper	Sound signal control of reader 1
8	GND & Shield	Common cable shield and wire of reader 1
9	GND & Shield	Common cable shield and wire of reader 2
10	R1:Beeper	Sound signal control of reader 2
11, 12	R1:Led Red R1:Led Green	Indication control of reader 2*
13, 14	R1:D0, R1:D1	Wiegand interface lines of reader 2

* By default, the reader indication control lines (pictogram indicators on the turnstile's front covers) are connected to the remote indicator control outputs of the CLB.140 board. This enables reader indicators to display the turnstile's current operation mode. If necessary, the reader indication control lines can be reconnected to the corresponding outputs of the ACS controller.

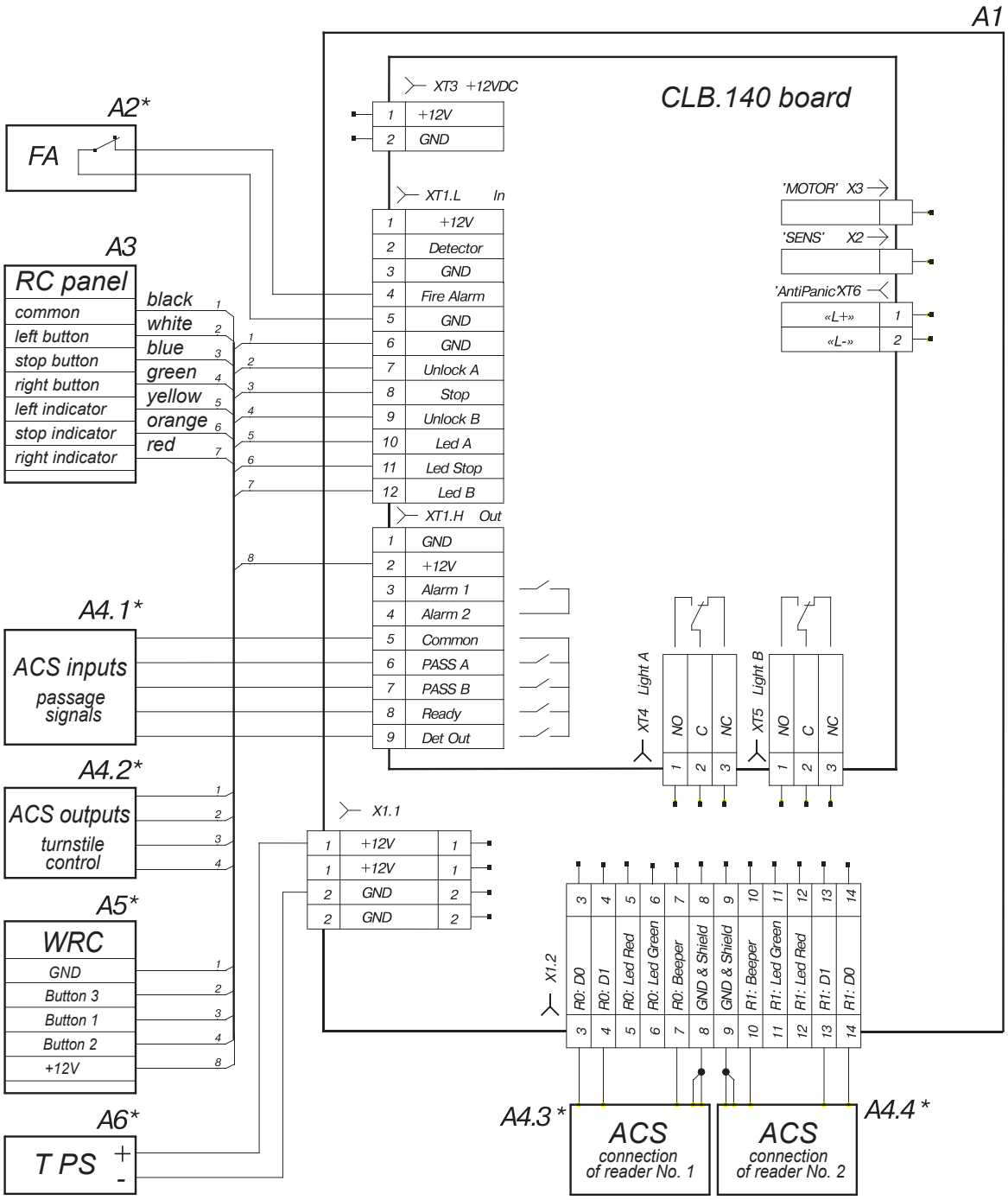

Connection layout of the TB-01.9A turnstile and additional equipment

Layout elements	
Item	**Name**
A1	Bracket with the control board and terminal blocks
A2*	Emergency passage unblocking device (Fire Alarm)
A3	RC panel
A4*	Access control system (ACS controller)**
A5*	WRC device
A6*	Power supply unit

* The equipment is not included in the standard delivery set

** The dimensions of the bracket for installation of the ACS controller board amount to 205x150 mm. The allowable height of the ACS controller board totals 35 mm.

Operation algorithm

The turnstile can be operated via its RC panel (included in the delivery set), WRC, or ACS controller.

The turnstile is controlled by applying a low-level signal to the Unlock A, Stop, and Unlock B contacts relative to the GND contact. The response to these signals depends on the control mode selected with the J1 jumper.

In the pulse control mode, a pulse is applied to the Unlock A/B input so that the turnstile automatically unlocks for a single passage in the selected direction. The passage waiting time does not depend on the control pulse duration and amounts to 5 seconds. A pulse sent to the Stop input blocks both passage directions. Pulses sent simultaneously to the Unlock A/B and Stop inputs switch the turnstile to the *Free passage* operation mode in the selected direction.

The pulse mode is recommended for operation from the RC panel. The orientation of RC-panel buttons relative to the turnstile's location (if the operator faces the rear side of the installed turnstile rather than the front side) can be changed by swapping the RC-panel wires connected to the Unlock A and Unlock B contacts as well as Led A and Led B respectively.

In the potential control mode, if a control signal is applied to the Unlock A/B input, the turnstile remains unlocked in the selected direction for as long as the signal is held. The control signal sent to the Stop input blocks both passage directions regardless of the signals at the Unlock A/B inputs.

The potential mode is recommended for operation from the ACS controller.

Regardless of the selected control mode, when the turnstile's barrier arms are rotated in either direction, passage signals are generated – PASS A or PASS B respectively. These signals can inform the ACS controller of the fact of passage in a particular direction..

In emergencies, the turnstile is unlocked by removing a low-level signal from the Fire Alarm contact relative to the GND contact.

Note

When the turnstile is operated via the ACS controller, it is recommended to connect the RC panel to the ACS controller.

By default, Wiegand-26 is set as the output data format for readers. During installation, the output data format can be changed to Wiegand-37, Wiegand-42, and Wiegand-58. Setting a particular output data format changes only the output data format itself and does not interfere with reading of cards of other formats.

The maximum allowable length of the RC-panel (ACS-controller) cable amounts to 40 meters.

The allowable length of the cable from the turnstile's power supply unit depends on its cross-section and must not exceed:

- for a cable with a cross-section of 1.5 mm^2 – 10 meters;
- for a cable with a cross-section of 2.5 mm^2 – 15 meters.

Overall dimensions

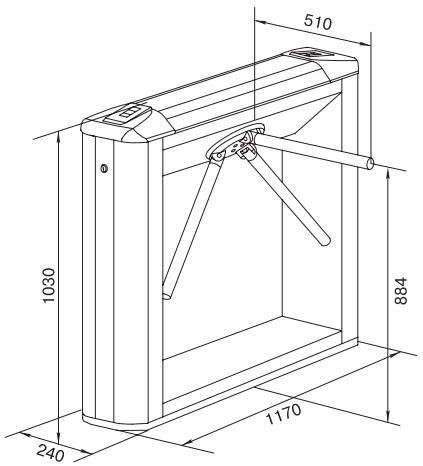

Overall dimensions of the TB-01.9A turnstile

Installation

Foundation requirements: concrete (grade 400 or higher), stone, and similar foundations with a thickness of at least 150 mm; when installing the turnstile on a less steady foundation, one should use embedded reinforcing elements (550x550x200 mm).

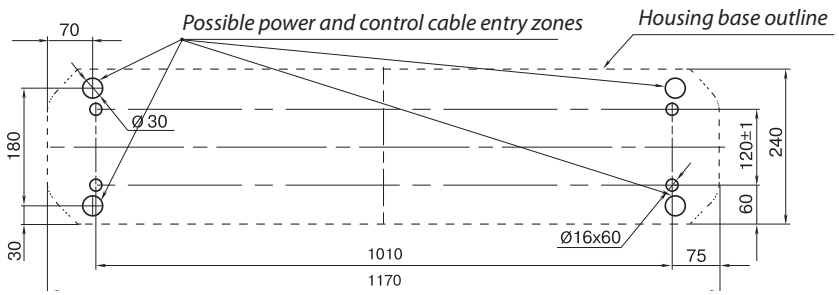

Hole marking layout

Passage zone formation

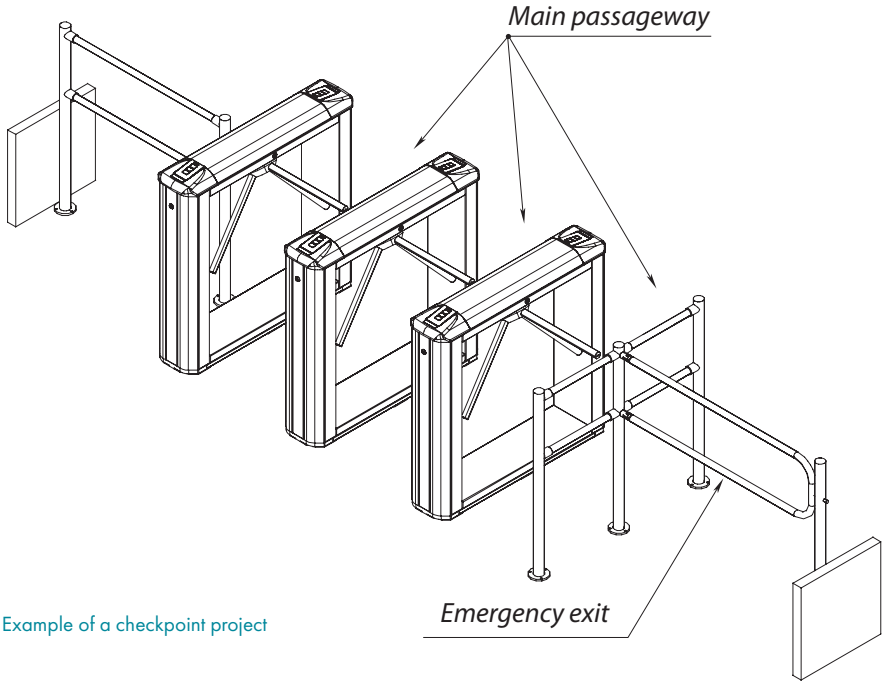

Example of a checkpoint project

Warranty

The warranty period amounts to 5 (five) years commencing from the date of sale, unless otherwise stipulated in the product delivery contract. In case of sale and installation of the equipment by authorized PERCo dealers and service centers, the warranty may start from the date of commissioning.

If there is no date of sale in the warranty card, the warranty period shall commence from the date of manufacture specified in the Certificate and on the label of the product.